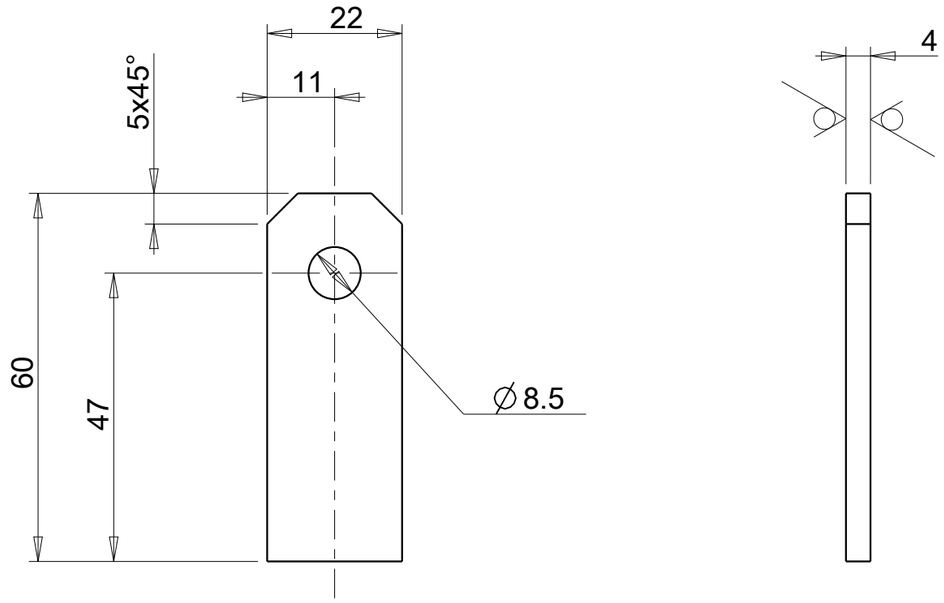

TS 12708 Steel Casting		
<1000	6,0	0,8
<630	4,0	0,7
<400	3,0	0,6
<250	3,0	0,4
100	2,0	0,3
40	1,5	0,2
L mm	Raw	Form
Nom. Size	Class	

ISO 2768 General Tolerance		
<4000	2,0	0,4
<2000	1,2	0,4
<1000	0,8	0,3
<400	0,5	0,3
30-120	0,3	0,2
2-30	0,2	0,1
L mm	m ±	K ±
Nom. Size	Class	

ISO 13920 Welded Construction		
>20000	9,0	8,0
<20000	8,0	7,0
<16000	7,0	6,0
<12000	6,0	5,0
<8000	5,0	4,0
<4000	4,0	3,0
<2000	3,0	2,0
<1000	2,0	1,5
<400	1,0	1,0
30-120	1,0	0,5
2-30	1,0	0,5
L mm	A ±	E ±
Nom. Size	Class	

Edge without dimension according to DIN ISO 13715

-0.3 +0.3

Ra 12.5

( )

STEEL SHEETS NOTES:

Thermal cutting - Classification of thermal cuts - Geometrical product specification and quality tolerances According to EN ISO 9013 - 231

Hot-rolled steel plates 3 mm thick or above - Tolerances on dimensions and shape According to EN10029 - B

Technical Specifications	-					
Technical Document	-					
Fixture/Mould Asset ID.	-					
Coating/Heat Tre./Roughness	-					
Paint/Color	-	Modf.No	Modification Description	Date	Sign	

No	Parça Adý Designation Name of Item	Adet Qty.	Resim No / Norm Drawing No / Norm	Malzeme Material	Ölçü Dimension	Ağirlik Weight (Kg)
				S355J2 EN 10025		0.0

ISO 1302 ISO 8015 EN 22553

EN 15085-2 Certification Level CL1 ☐ CL2 ☐ CL3 ☐ CL4 ☐

General Tol.	ISO 2768	f ☐	m ☒ H ☐ K ☒
Weld Prod.	ISO 13920	A ☒	B ☐ E ☒ F ☐
Cast Steel	ISO 12708	Lm2 ☐	Lr2 ☐ Sm2 ☐ Sr2 ☐

Approved	P.Farina	
Checked	M.Borlo	
Prepared	S.Ponzo	

Scale 1:1

TYP

Flange

Date:14/11/18

TÜVASAS

Turkish Wagon Industry

EM20.04.03.80006

Sheet:1/1 Size:A3 Rev:00

Reproduction, dissemination or use of this document or its all contents in any form without the prior written permission of TUVASAS, is prohibited. Offenders will be liable for the payment of damages. All rights reserved in the event of the grant of a patent, utility model or ornamental design registration.